Characterization of Nonneutral Plasmas Confined in a Gabor Lens

Kathrin Schulte

IAP Workshop 2012

GOETHE UNIVERSITÄT FRANKFURT AM MAIN

IAP

NNP
Non Neutral Plasma Physics Group

Accelerator Physics

NNP
Non Neutral Plasma
Physics Group

Gabor Lens

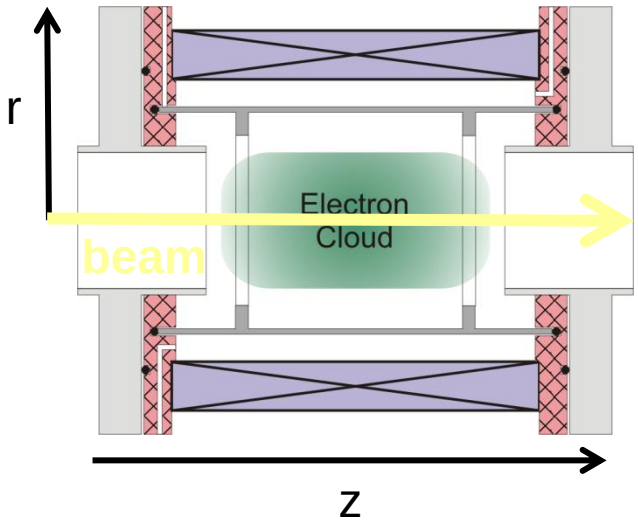

Electric Space Charge Field

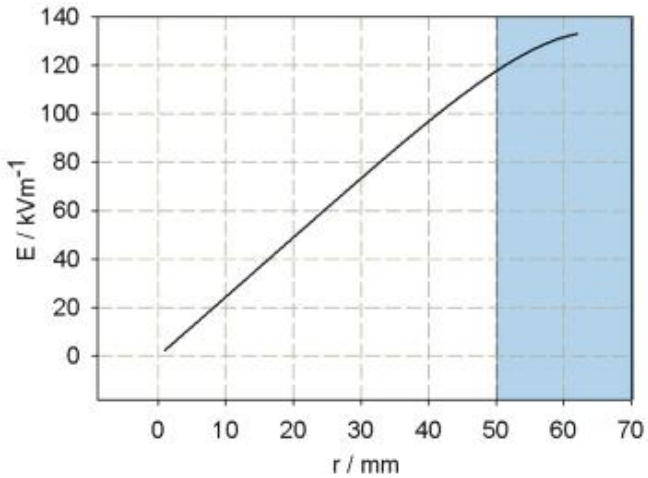

Focussing Force

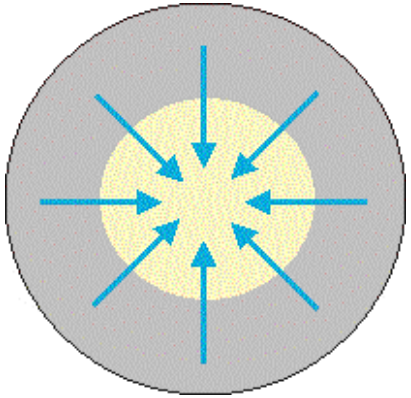

- proposal by D. Gabor in 1947
- linear electric space charge field in case of homogeneous electron density distribution
- focussing independent of ion mass
- space charge compensation

Plasma- and Astrophysics

NNP
Non Neutral Plasma Physics Group

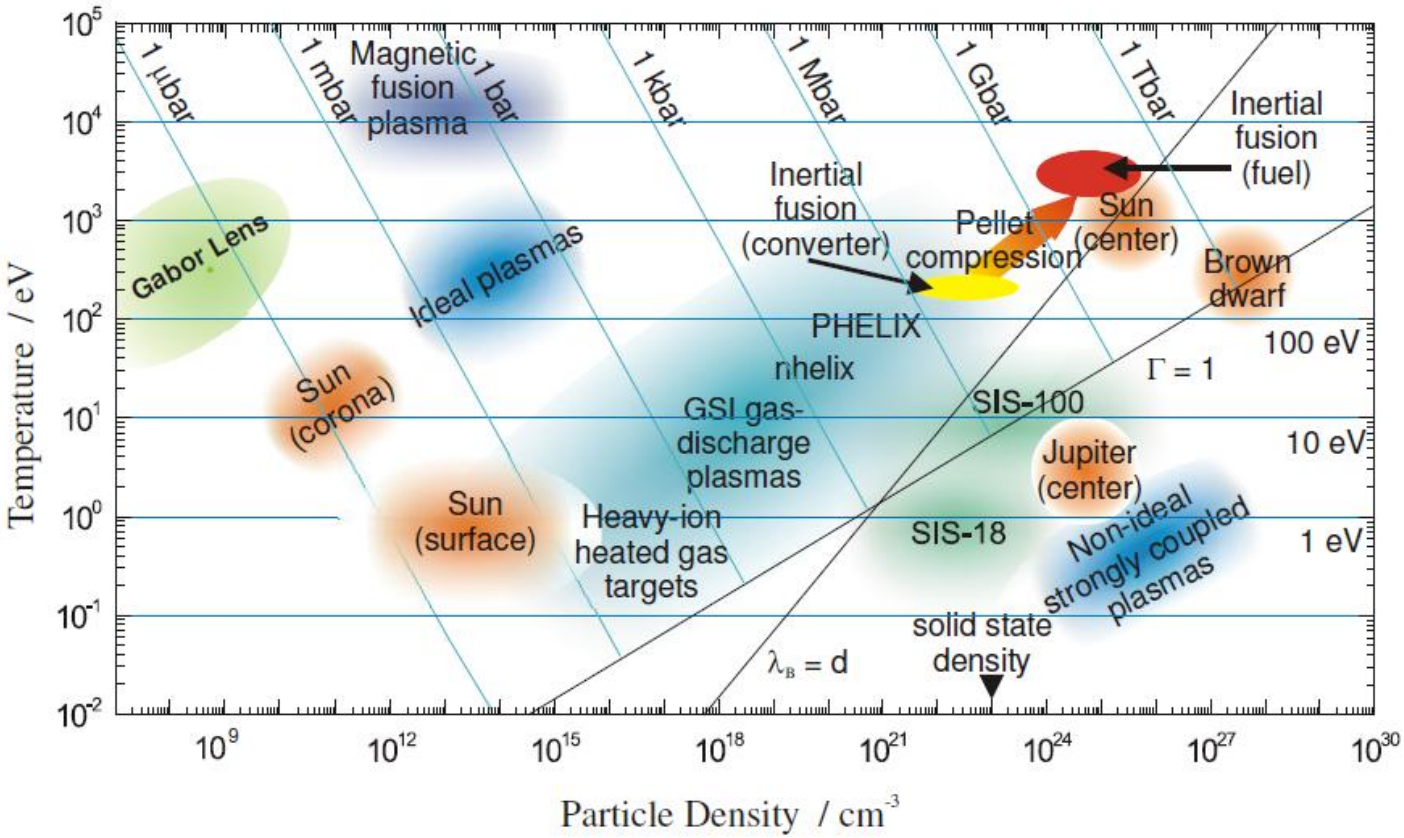

- nonneutral plasma properties: $n_e=10^{14}$-10^{15} m^{-3}, T_e=100-1000 eV
- study of plasma properties under laboratory conditions
- investigation of new diagnostic techniques

Gabor Plasma Lens

NNP
Non Neutral Plasma
Physics Group

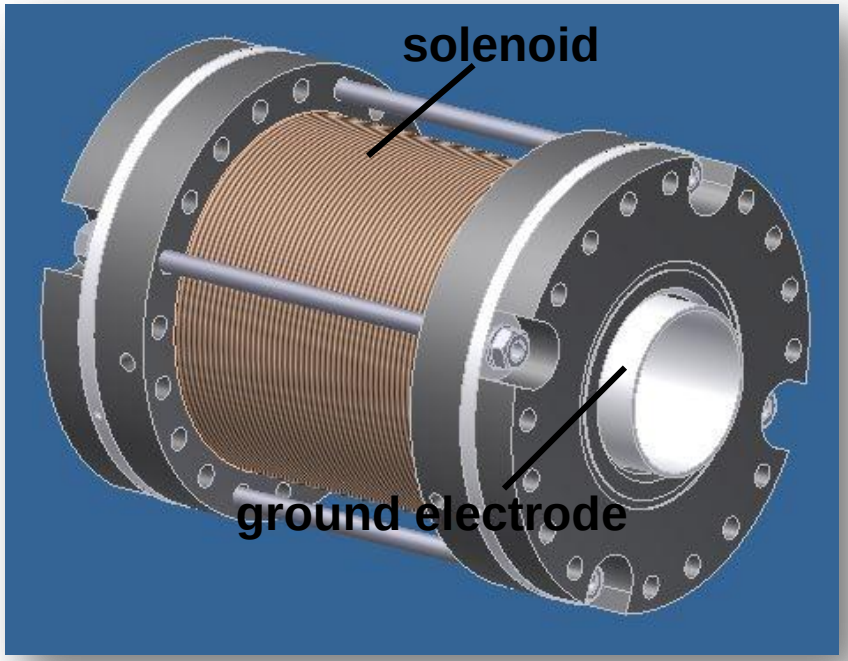

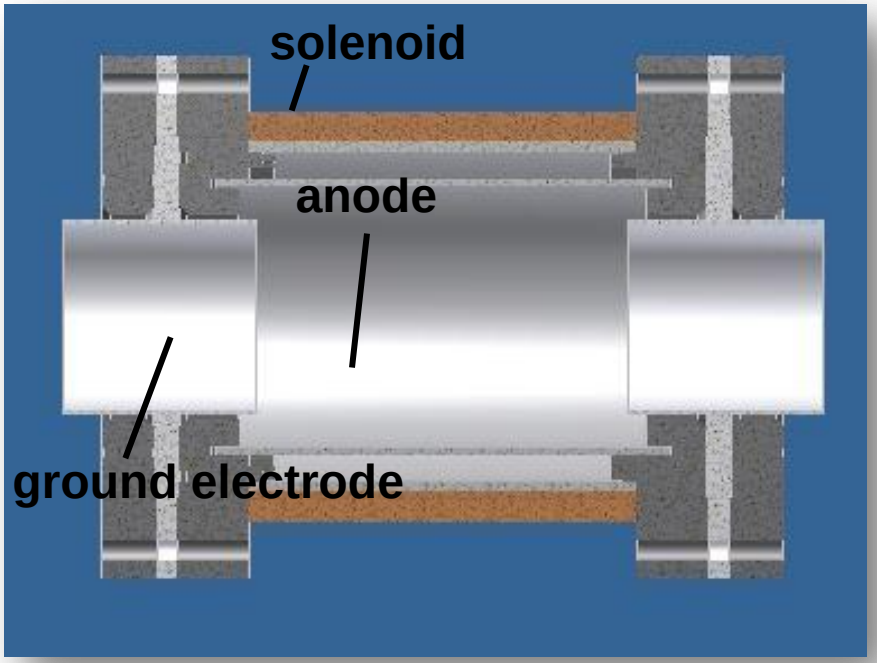

Confinement Principle

NNP
Non Neutral Plasma
Physics Group

Radial Confinement

Radial force balance for an axicentred, circular electron orbit:

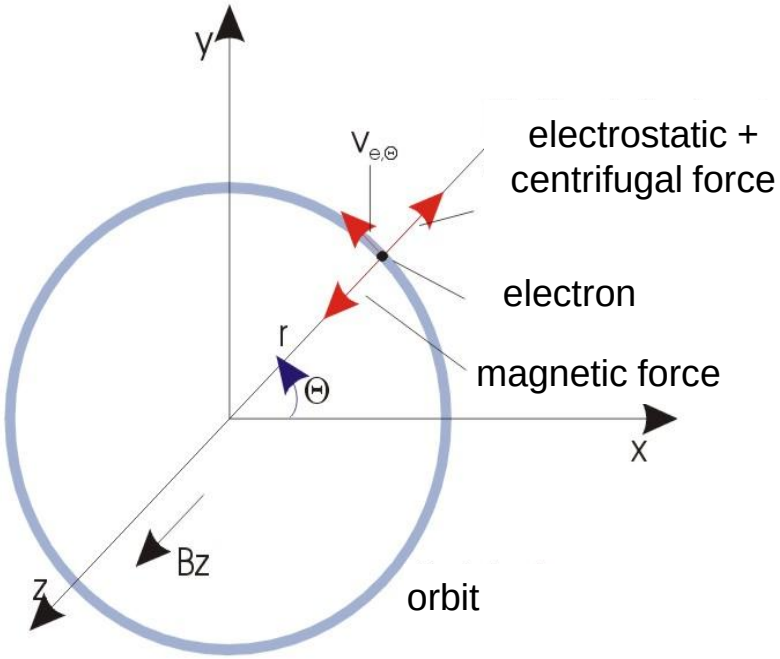

Longitudinal Confinement

Potential depression by confined electrons:

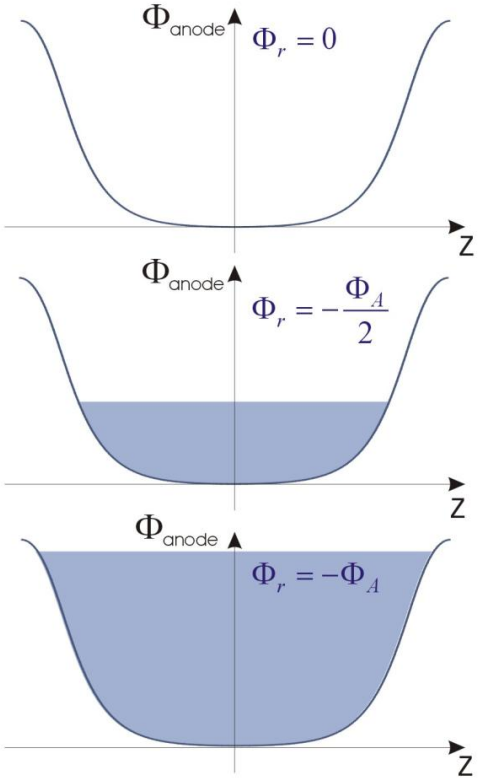

Space Charge Lenses at IAP

NNP
Non Neutral Plasma
Physics Group

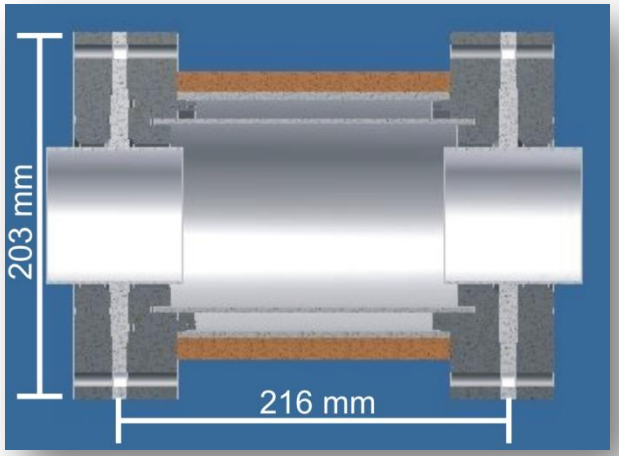

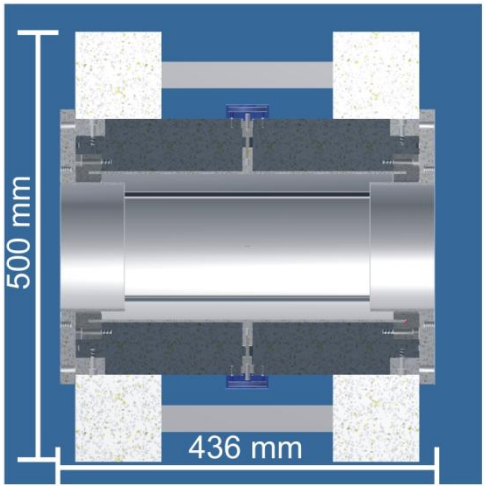

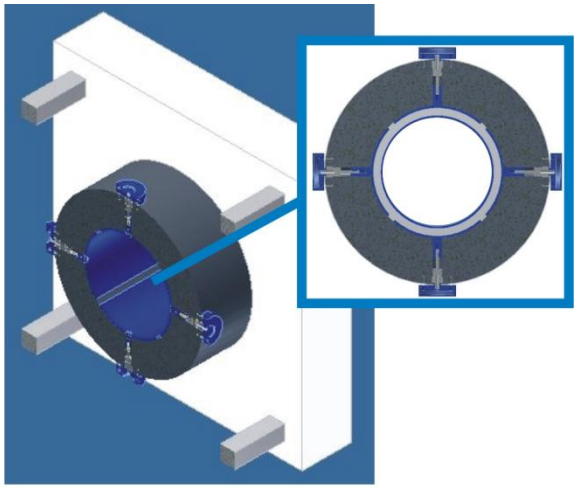

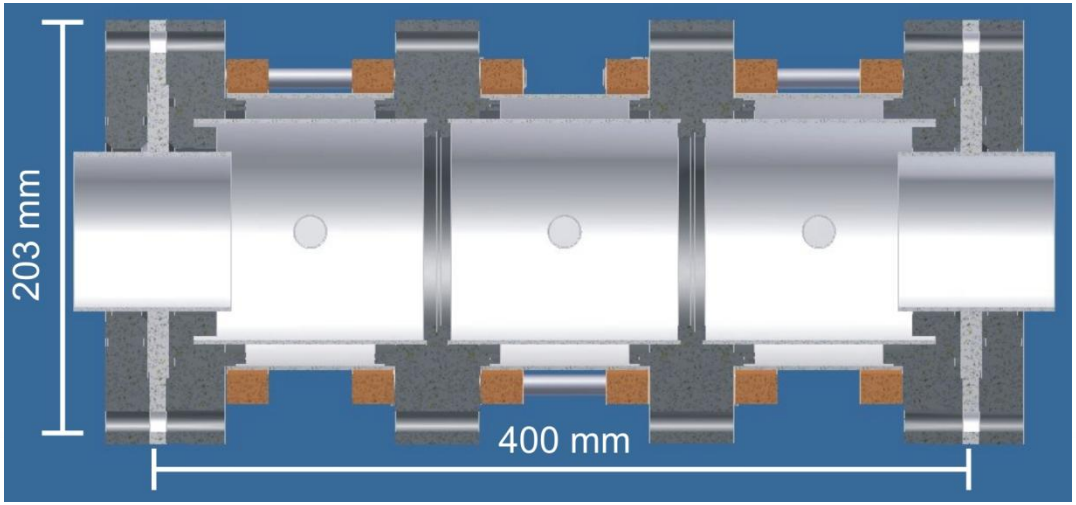

Electron Production

NNP
Non Neutral Plasma
Physics Group

1. Several residual gas atoms are ionised by natural radioactivity or cosmos radiation in the lens volume.
2. In the electric field the produced residual gas ions are accelerated out of the Gabor Lens and on their way they are able to ionise other residual gas atoms.
3. Additionally secondaries are produced by the interaction of particles with the surface of the electrode.
4. In case of use as focussing optics electrons are produced by beam ions.

Study of production and loss mechanisms on the basis of emitted xray radiation.

Bachelor Thesis, Stephan Klaproth

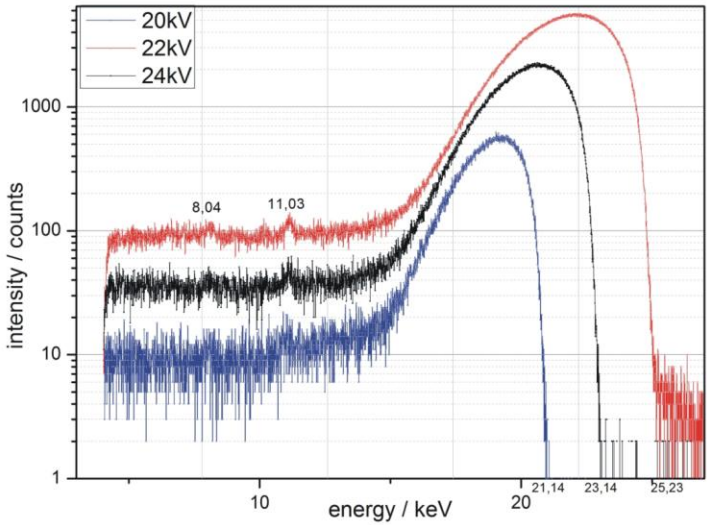

Electron Density Measurement Scheme

NNP
Non Neutral Plasma Physics Group

Trajectories of Emitted Residual Gas Ions

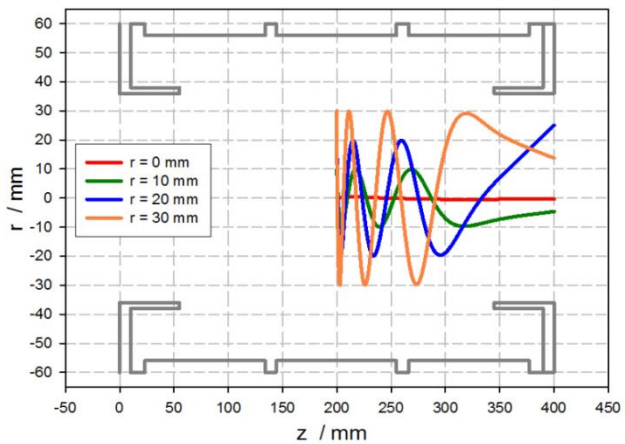

Detected Ion Energy Distribution

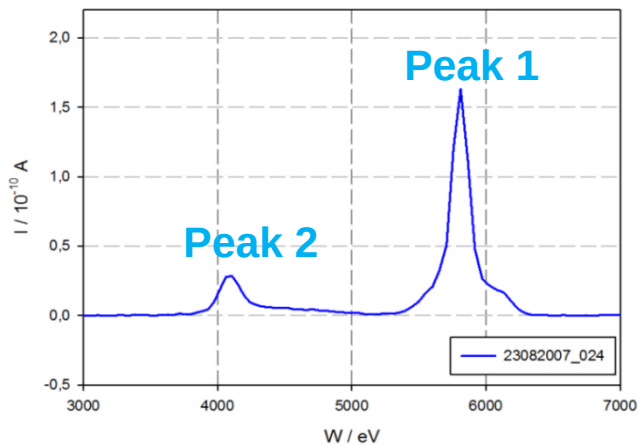

Localization of Production

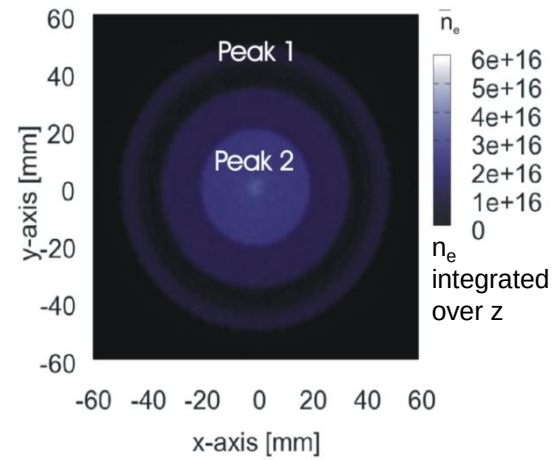

Potential Depression by Confined Electrons

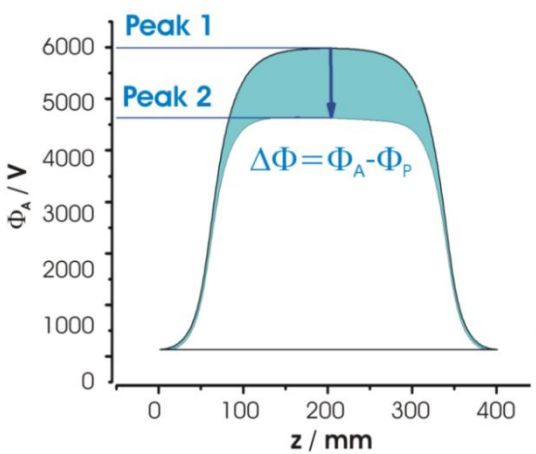

$$n_e = \frac{4\varepsilon_0 \Delta\Phi_A}{e r^2}$$

Mean Electron Density

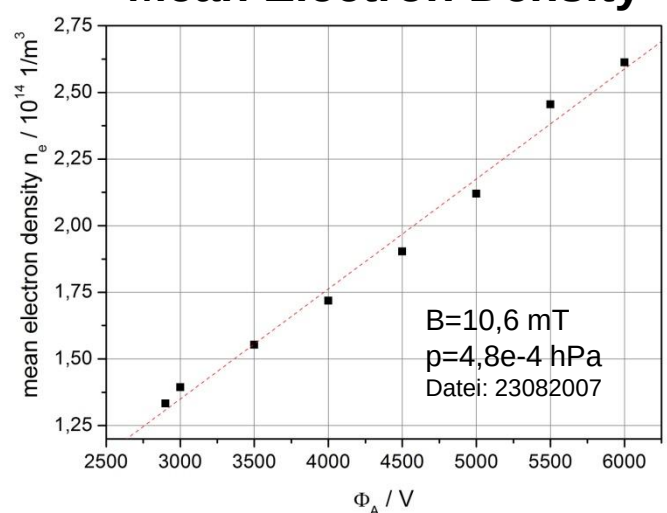

Temperature Measurement Scheme

NNP
Non Neutral Plasma Physics Group

Ratio of Emission Cross Sections

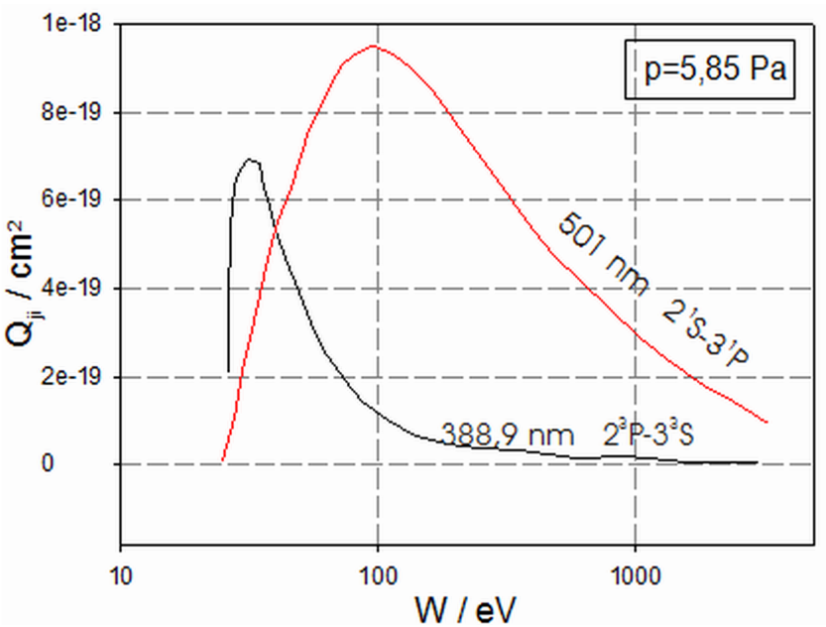

$$\frac{\Phi_{ij}}{\Phi_{ab}} = \frac{\int_{E1}^{\infty} Q_{ij}(E)\exp\left(-E/kT_e\right)EdE}{\int_{E2}^{\infty} Q_{ab}(E)\exp\left(-E/kT_e\right)EdE}$$

John B. Boffard et al., University of Wisconsin, 2004

Measurement Scheme

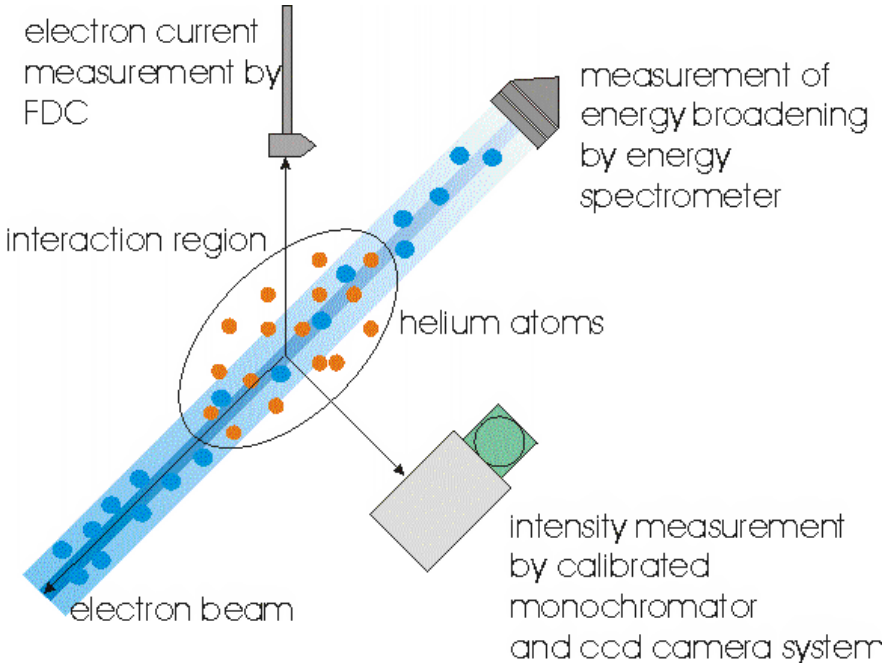

Optical Emission Cross Section:

$$Q_{ji} = \frac{\Phi_{ji}}{I/_e \cdot n_0}$$

$$\Phi_{ji} = \frac{photons}{t \cdot \Delta x} = \frac{I_{ji}}{t \cdot \Delta x}$$

Time-resolved Diagnostics

NNP
Non Neutral Plasma Physics Group

Measured Ion Current

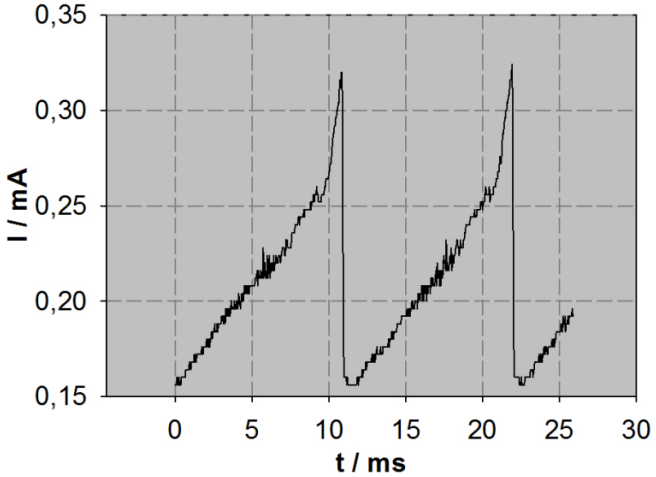

Measured Intensity

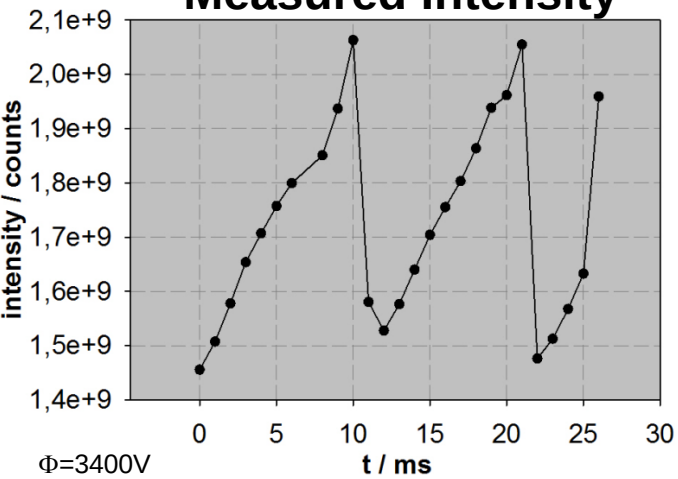

Φ=3400V
B=12 mT
p=7,9-4 hPa (He)
Datei: 18072011

Time-resolved Measurement of an Instability

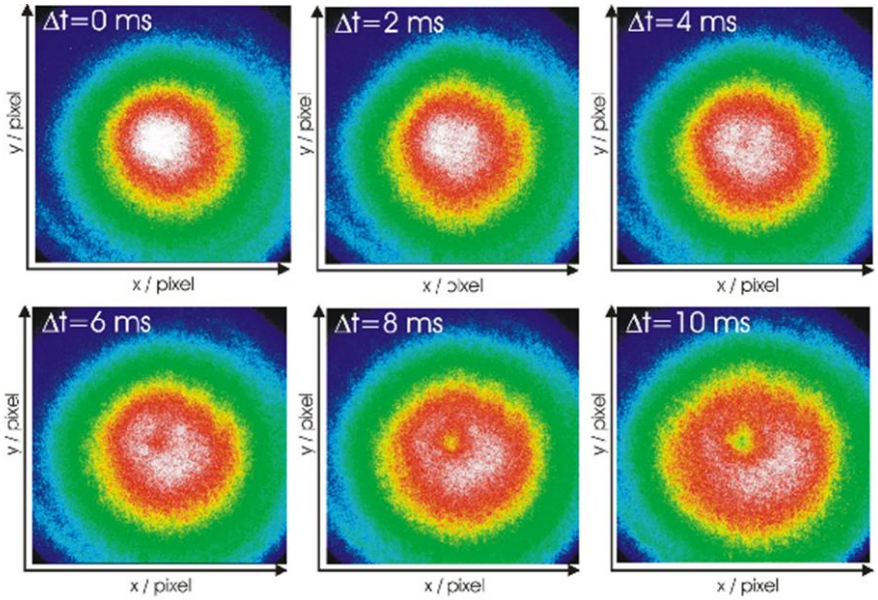

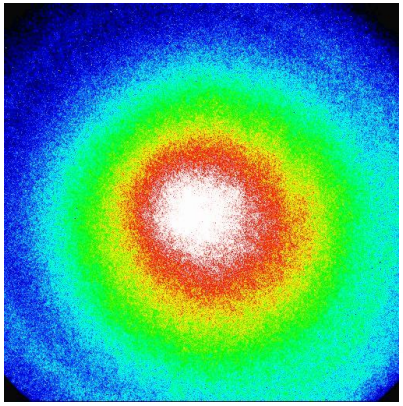

Bachelor Thesis, Benjamin Glaeser

Experimental Set-up

NNP
Non Neutral Plasma Physics Group

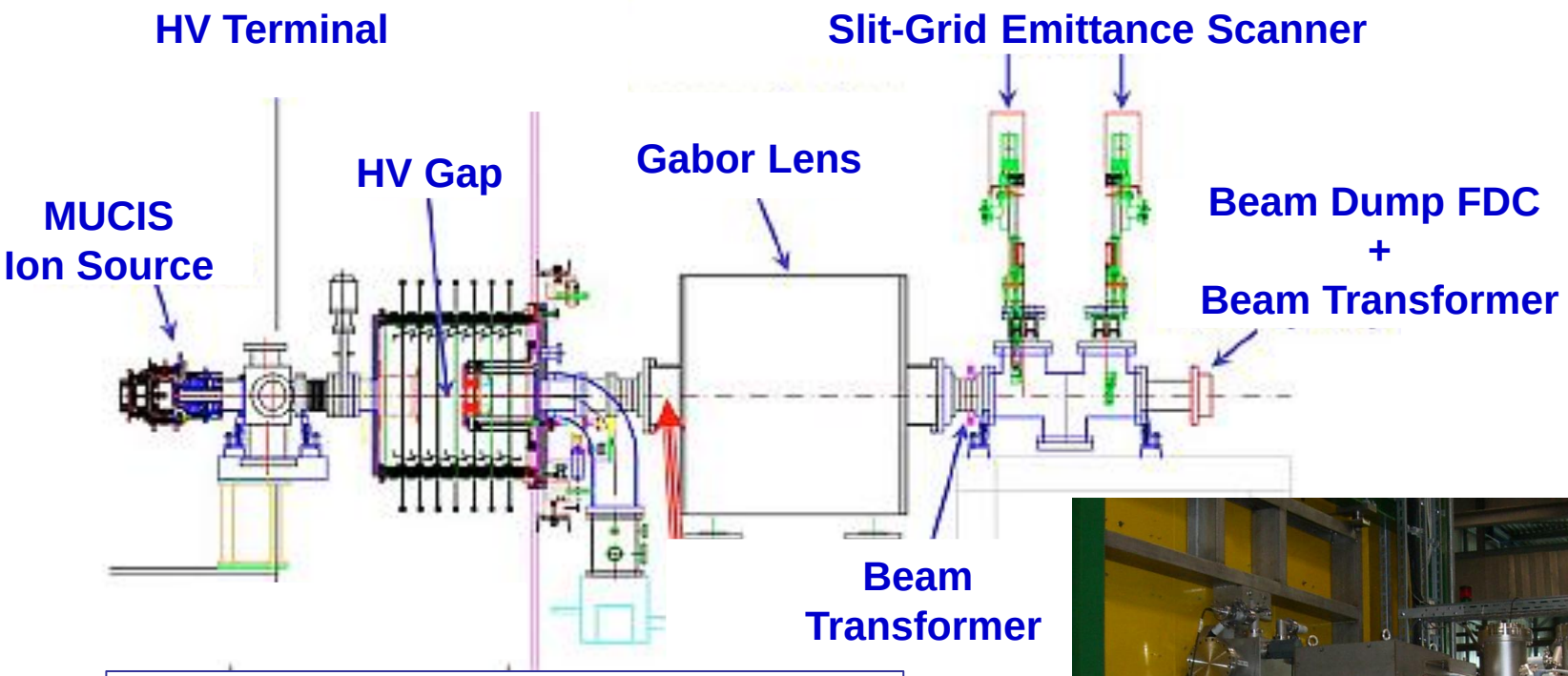

beam parameters:
pulse length=1,25 ms, rep. rate=1 Hz

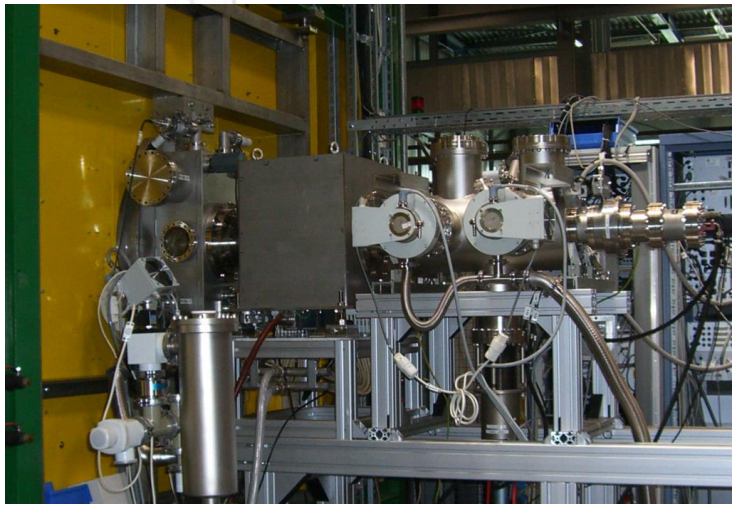

Excerpt from the Results

NNP
Non Neutral Plasma
Physics Group

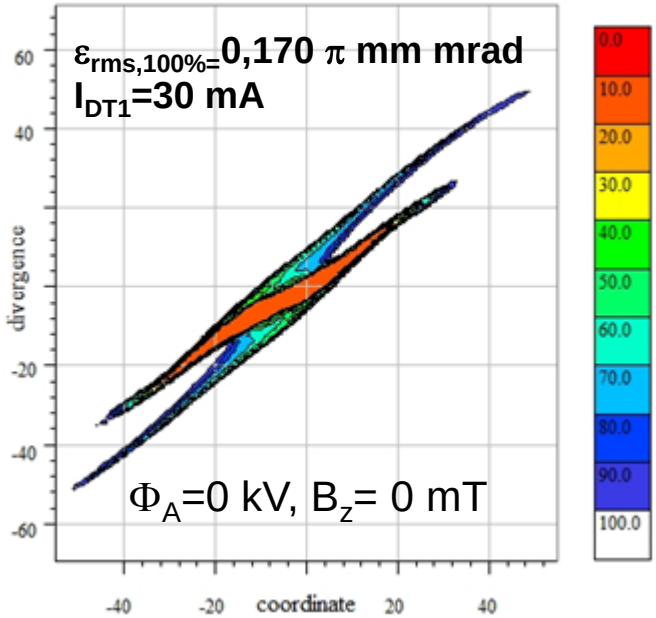

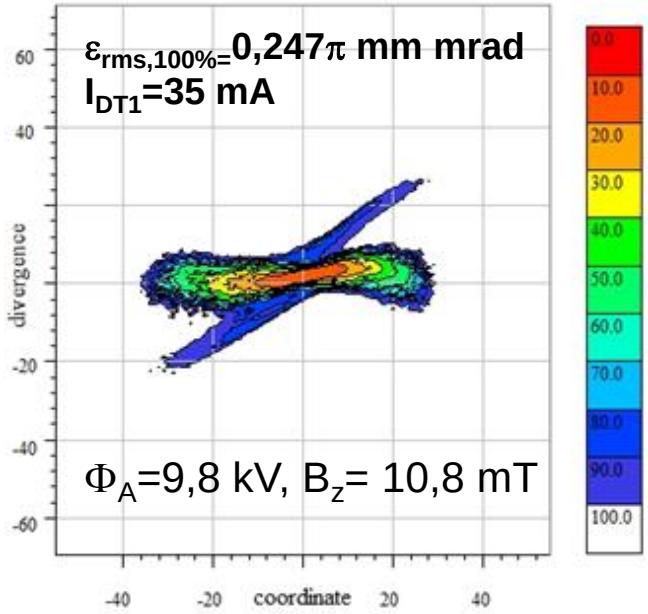

Beam parameters:
Ar^{1+}, 3,1 keV/u

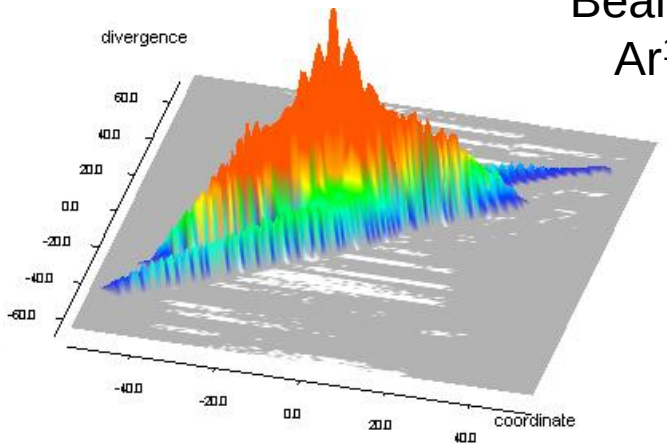

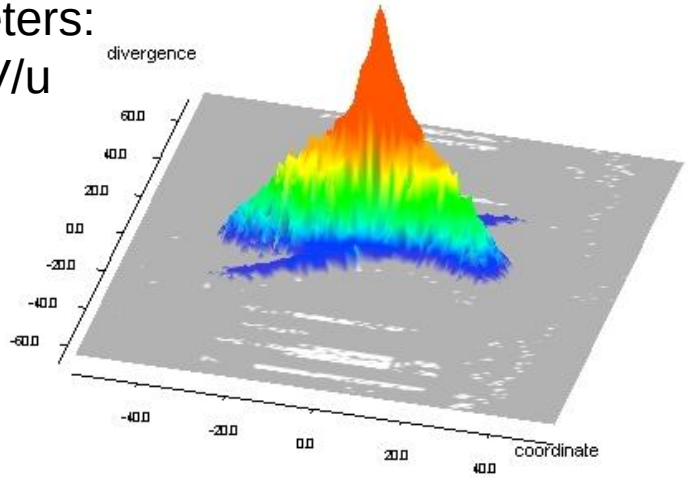

Thank you for your attention!